Viscoplastic Creep in Solder Joints

Introduction

This example studies viscoplastic creep in solder joints under thermal loading using the Anand viscoplasticity model.

The Anand model is suitable for large, isotropic, viscoplastic deformations in combination with small elastic deformations. The following flow equation takes the strain rate dependence on the stress into account:

$$\dot{\varepsilon}_p = A\exp\left(-\frac{Q}{RT}\right)\left[\sinh\left(\xi\frac{\sigma}{s}\right)\right]^{\frac{1}{m}} \tag{1}$$

where $\dot{\varepsilon}_p$ is the inelastic strain rate, A is the pre-exponential factor, Q is the activation energy, m is the strain rate sensitivity, ξ is the multiplier of stress, R is the Boltzmann constant, and T is the absolute temperature.

The internal variable s is called deformation resistance, and it obeys the evolution equation

$$\dot{s} = \left\{h_0\left|1-\frac{s}{s^*}\right|^a \operatorname{sign}\left(1-\frac{s}{s^*}\right)\right\}\dot{\varepsilon}_p \tag{2}$$

where

$$s^* = \hat{s}\left[\frac{\dot{\varepsilon}_p}{A}\exp\left(\frac{Q}{RT}\right)\right]^n \tag{3}$$

is the saturation value of s, h_0 is the hardening constant, a is the strain rate sensitivity of hardening, $\hat{s}$ is the coefficient for deformation resistance saturation, and n is the strain rate sensitivity of deformation resistance.

Model Definition

The model geometry is shown in Figure 1. It includes two electronic components (chips) mounted on a circuit board by means of several solder ball joints.

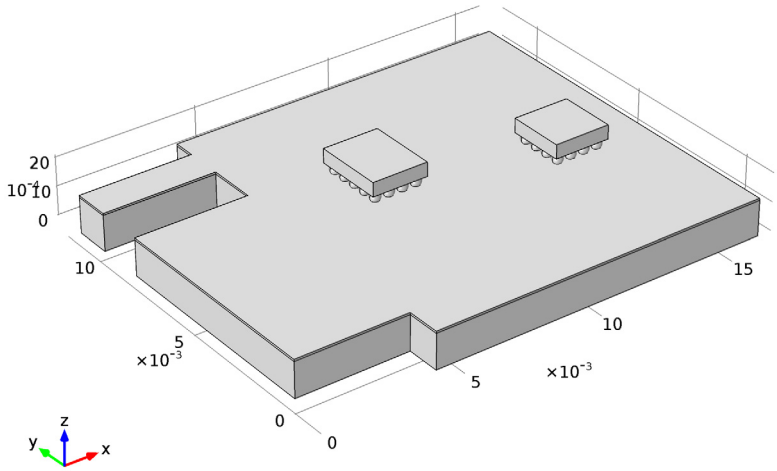

Figure 1: Model geometry.

The solder material is 60Sn40Pb. The circuit board consists of two layers: a thin layer of copper and a thicker layer of FR4 material. The chips are made of silicon. You can find the material and thermal properties for these three materials and for 60Sn40Pb in the material library available in COMSOL Multiphysics.

The nine material parameters needed to apply the Anand model for this solder are available in the literature (Ref. 1). They are summarized in the following table:

TABLE 1: MODEL DATA FOR THE VISCOPLASTIC SOLDER JOINTS MODEL

PROPERTY	VALUE	DESCRIPTION
A	$1.49 \cdot 10^7$ 1/s	Pre-exponential factor
Q/R	10,830 K	Activation energy/Boltzmann constant
m	0.303	Strain rate sensitivity of stress
n	0.0231	Sensitivity for deformation resistance
a	1.34	Strain rate sensitivity of hardening
$\hat{s}$	80.42 MPa	Coefficient for deformation resistance saturation
s_0	56.33 MPa	Initial value of deformation resistance

TABLE 1: MODEL DATA FOR THE VISCOPLASTIC SOLDER JOINTS MODEL

PROPERTY	VALUE	DESCRIPTION
ξ	11	Multiplier of stress
h_0	2640.75 MPa	Hardening constant
T_0	313 K	Initial temperature

The structure has initially constant temperature $T_0 = 313$ K. The heat generation within the chips causes the thermal loading of the structure. The simulation runs 80 s of such loading. You model it by the constant heat source $Q = 1{\cdot}10^8$ W/m^3.

Results and Discussion

When you study the results, bear in mind that the mesh used here is too coarse to produce converged results and reliable results for the stresses and strains. The model serves only to display the principal features.

The temperature distribution after 80 s of operation is shown in Figure 2. The maximum temperature increase is about 55 degrees.

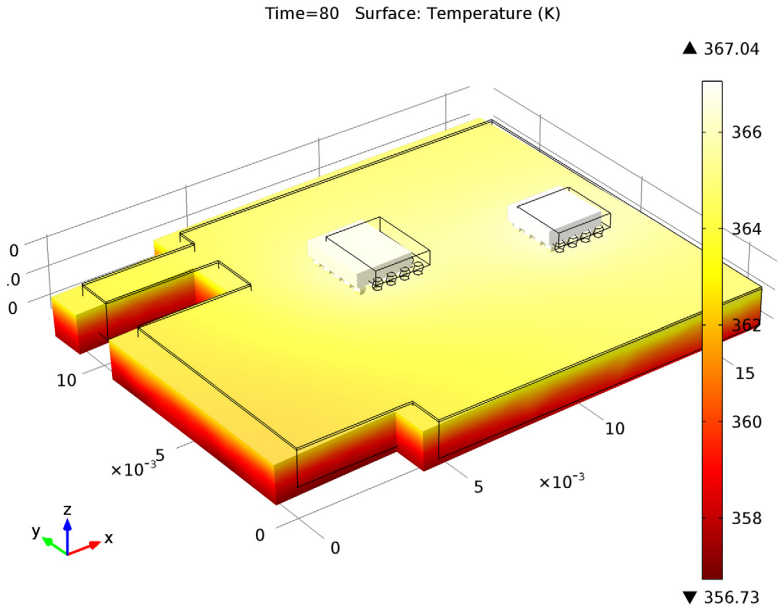

Figure 2: Final temperature distribution.

Figure 3 shows about 2.5% increase in the deformation resistance at the end of the process.

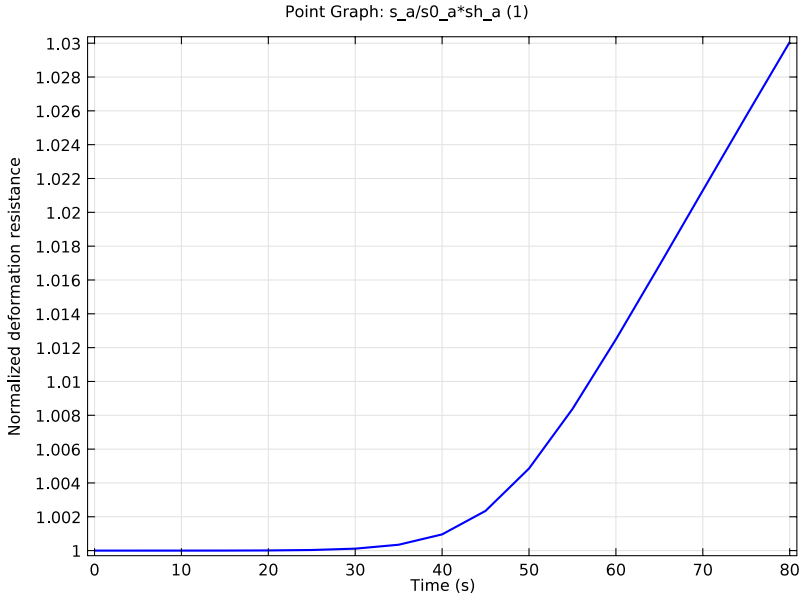

Figure 3: Hardening.

The elastic and inelastic strains at the same position within the solder are shown in Figure 4. A clear start of intensive plastic flow appears after about 40 s of the loading. This is in good agreement with the material behavior and shows the ability of Anand

model to predict results comparable with the plasticity models based on the yield stress criteria, which require computations of the yield surfaces.

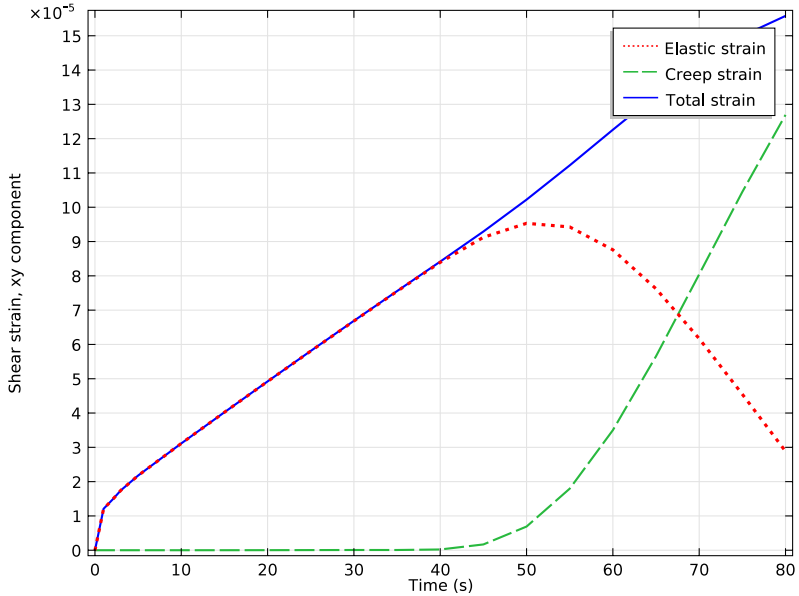

Figure 4: Viscoplasticity.

Notes About the COMSOL Implementation

You perform this analysis the Thermal Stress interface. It would also have been possible to combine one Solid Mechanics interface and one Heat Transfer in Solids interface. The solution is made using the segregated solver, with the heat transfer equation solved separately before the solid mechanics equations. In this way you take advantage of the linearity of the heat transfer problem, and the fact that the coupling between the temperature and the solid mechanics problems is unidirectional. Instead of the iterative

solver used here for the second step, you can select a direct solver if your computer has enough available memory.

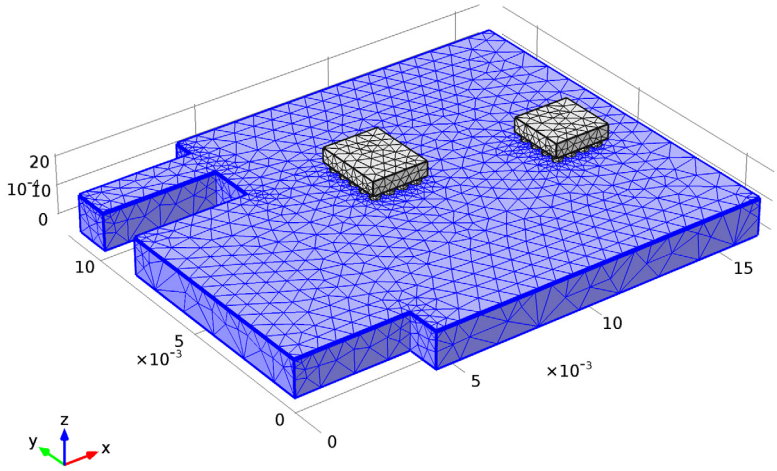

Figure 5: Meshed geometry.

In order to keep the model size down, the mesh is rather coarse (Figure 5) and the results in the solder balls can be not accurate enough for making quantitative predictions. In reality, the best approach would probably be to first run a model of this type first to find out which solder ball has the largest strains. In a second analysis, you can then analyze a model where an individual solder ball has an improved modeling resolution.

Reference

1. Z.N. Cheng, G.Z. Wang, L. Chen, J. Wilde, and K. Becker, "Viscoplastic Anand Model for Solder Alloys and its Application," *Soldering & Surface Mount Technology*, vol. 12, no. 2, pp. 31–36, 2000.

Model Library path: `Nonlinear_Structural_Materials_Module/Viscoplasticity/viscoplastic_solder_joints`

Modeling Instructions

MODEL WIZARD

1 Go to the **Model Wizard** window.

2 Click **Next**.

3 In the **Add physics** tree, select **Structural Mechanics>Thermal Stress (ts)**.

4 Click **Add Selected**.

5 Click **Next**.

6 Find the **Studies** subsection. In the tree, select **Preset Studies>Time Dependent**.

7 Click **Finish**.

GLOBAL DEFINITIONS

Parameters

1 In the **Model Builder** window, right-click **Global Definitions** and choose **Parameters**.

2 In the **Parameters** settings window, locate the **Parameters** section.

3 In the table, enter the following settings:

Name	Expression	Description
`T0`	`313[K]`	`Initial temperature`

GEOMETRY 1

Import 1

1 In the **Model Builder** window, under **Model 1** right-click **Geometry 1** and choose **Import**.

2 In the **Import** settings window, locate the **Import** section.

3 Click the **Browse** button.

4 Browse to the model's Model Library folder and double-click the file `viscoplastic_solder_joints.mphbin`.

5 Click the **Import** button.

Form Union

1 In the **Model Builder** window, under **Model 1>Geometry 1** click **Form Union**.

2 In the **Settings** window, click **Build All**.

DEFINITIONS

Explicit 1

1. In the **Model Builder** window, under **Model 1** right-click **Definitions** and choose **Selections>Explicit**.
2. Select Domain 1 only.
3. Right-click **Model 1>Definitions>Explicit 1** and choose **Rename**.
4. Go to the **Rename Explicit** dialog box and type `FR4` in the **New name** edit field.
5. Click **OK**.

Explicit 2

1. Right-click **Definitions** and choose **Selections>Explicit**.
2. Select Domain 2 only.
3. Right-click **Model 1>Definitions>Explicit 2** and choose **Rename**.
4. Go to the **Rename Explicit** dialog box and type `Copper` in the **New name** edit field.
5. Click **OK**.

Explicit 3

1. Right-click **Definitions** and choose **Selections>Explicit**.
2. Select Domains 3 and 24 only.
3. Right-click **Model 1>Definitions>Explicit 3** and choose **Rename**.
4. Go to the **Rename Explicit** dialog box and type `Silicon` in the **New name** edit field.
5. Click **OK**.

Explicit 4

1. Right-click **Definitions** and choose **Selections>Explicit**.
2. In the **Explicit** settings window, locate the **Input Entities** section.
3. Select the **All domains** check box.
4. Select Domains 4–23 and 25–40 only.

   You can do this by first copying the text “4–23 and 25–40” and then clicking the **Paste Selection** button next to the **Selection box** or clicking in the box and pressing Ctrl+V.
5. Right-click **Model 1>Definitions>Explicit 4** and choose **Rename**.
6. Go to the **Rename Explicit** dialog box and type `Solder` in the **New name** edit field.
7. Click **OK**.

 ©2012 COMSOL

Explicit 5

1 Right-click **Definitions** and choose **Selections>Explicit**.

2 In the **Explicit** settings window, locate the **Output Entities** section.

3 From the **Output entities** list, choose **Adjacent boundaries**.

4 Locate the **Input Entities** section. Select the **All domains** check box.

5 Select Domains 4–23 and 25–40 only.

6 Right-click **Model 1>Definitions>Explicit 5** and choose **Rename**.

7 Go to the **Rename Explicit** dialog box and type `Solder_face` in the **New name** edit field.

8 Click **OK**.

THERMAL STRESS

Thermal Linear Elastic Material 1

1 In the **Model Builder** window, expand the **Model 1>Thermal Stress** node, then click **Thermal Linear Elastic Material 1**.

2 In the **Thermal Linear Elastic Material** settings window, locate the **Thermal Expansion** section.

3 In the T_{ref} edit field, type `T0`.

Viscoplasticity 1

1 Right-click **Model 1>Thermal Stress>Thermal Linear Elastic Material 1** and choose **Viscoplasticity**.

2 In the **Viscoplasticity** settings window, locate the **Domain Selection** section.

3 From the **Selection** list, choose **Solder**.

4 Locate the **Model Inputs** section. From the T list, choose **Temperature (ts/tle1)**.

5 Locate the **Viscoplasticity Model** section. In the A edit field, type `1.49e7`.

6 In the Q edit field, type `90046`.

7 In the ξ edit field, type `11`.

8 In the m edit field, type `0.303`.

9 In the s_0 edit field, type `80.42[MPa]`.

10 In the h_0 edit field, type `2640.75[MPa]`.

11 In the a edit field, type `1.34`.

12 In the n edit field, type `0.0231`.

13 In the s_{init} edit field, type `56.33[MPa]`.

Initial Values 1

1 In the **Model Builder** window, under **Model 1>Thermal Stress** click **Initial Values 1**.

2 In the **Initial Values** settings window, locate the **Initial Values** section.

3 In the T edit field, type `T0`.

Roller 1

1 In the **Model Builder** window, right-click **Thermal Stress** and choose the boundary condition **Solid Mechanics>Roller**.

2 Select Boundaries 17, 19, 182, and 183 only.

Prescribed Displacement 1

1 Right-click **Thermal Stress** and choose **Points>Prescribed Displacement**.

2 Select Point 193 only.

3 In the **Prescribed Displacement** settings window, locate the **Prescribed Displacement** section.

4 Select the **Prescribed in z direction** check box.

Heat Source 1

1 Right-click **Thermal Stress** and choose the domain setting **Heat Transfer>Heat Source**.

2 In the **Heat Source** settings window, locate the **Domain Selection** section.

3 From the **Selection** list, choose **Silicon**.

4 Locate the **Heat Source** section. In the Q edit field, type `1e8`.

Heat Flux 1

1 Right-click **Thermal Stress** and choose the boundary condition **Heat Transfer>Heat Flux**.

2 Select Boundary 3 only.

3 In the **Heat Flux** settings window, locate the **Heat Flux** section.

4 Click the **Inward heat flux** button.

5 In the h edit field, type `10`.

6 In the T_{ext} edit field, type `T0`.

MATERIALS

Material Browser

1 In the **Model Builder** window, under **Model 1** right-click **Materials** and choose **Open Material Browser**.

2 In the **Material Browser** window, locate the **Materials** section.

3 In the tree, select **Built-In>FR4 (Circuit Board)**.

4 Right-click and choose **Add Material to Model** from the menu.

FR4 (Circuit Board)

1 In the **Model Builder** window, under **Model 1>Materials** click **FR4 (Circuit Board)**.

2 In the **Material** settings window, locate the **Geometric Entity Selection** section.

3 From the **Selection** list, choose **FR4**.

Material Browser

1 In the **Model Builder** window, right-click **Materials** and choose **Open Material Browser**.

2 In the **Material Browser** window, locate the **Materials** section.

3 In the tree, select **Built-In>Copper**.

4 Right-click and choose **Add Material to Model** from the menu.

Copper

1 In the **Model Builder** window, under **Model 1>Materials** click **Copper**.

2 In the **Material** settings window, locate the **Geometric Entity Selection** section.

3 From the **Selection** list, choose **Copper**.

Material Browser

1 In the **Model Builder** window, right-click **Materials** and choose **Open Material Browser**.

2 In the **Material Browser** window, locate the **Materials** section.

3 In the tree, select **Built-In>Silicon**.

4 Right-click and choose **Add Material to Model** from the menu.

Silicon

1 In the **Model Builder** window, under **Model 1>Materials** click **Silicon**.

2 In the **Material** settings window, locate the **Geometric Entity Selection** section.

3 From the **Selection** list, choose **Silicon**.

Material Browser

1 In the **Model Builder** window, right-click **Materials** and choose **Open Material Browser**.

2 In the **Material Browser** window, locate the **Materials** section.

3 In the tree, select **Built-In>Solder, 60Sn-40Pb**.

4 Right-click and choose **Add Material to Model** from the menu.

Solder, 60Sn-40Pb

1 In the **Model Builder** window, under **Model 1>Materials** click **Solder, 60Sn-40Pb**.

2 In the **Material** settings window, locate the **Geometric Entity Selection** section.

3 From the **Selection** list, choose **Solder**.

MESH 1

1 In the **Model Builder** window, under **Model 1** click **Mesh 1**.

2 In the **Mesh** settings window, locate the **Mesh Settings** section.

3 From the **Sequence type** list, choose **User-controlled mesh**.

Size 1

1 In the **Model Builder** window, under **Model 1>Mesh 1** right-click **Free Tetrahedral 1** and choose **Size**.

2 In the **Size** settings window, locate the **Geometric Entity Selection** section.

3 From the **Geometric entity level** list, choose **Domain**.

4 Select Domains 1 and 2 only.

5 Locate the **Element Size** section. From the **Predefined** list, choose **Coarser**.

6 In the **Model Builder** window, right-click **Mesh 1** and choose **Build All**.

STUDY 1

Step 1: Time Dependent

1 In the **Model Builder** window, expand the **Study 1** node, then click **Step 1: Time Dependent**.

2 In the **Time Dependent** settings window, locate the **Study Settings** section.

3 In the **Times** edit field, type `range(0,0.5,3) range(5,5,80)`.

4 In the **Model Builder** window, right-click **Study 1** and choose **Show Default Solver**.

5 Expand the **Study 1>Solver Configurations** node.

Solver 1

1 In the **Model Builder** window, expand the **Study 1>Solver Configurations>Solver 1** node, then click **Time-Dependent Solver 1**.

2 In the **Time-Dependent Solver** settings window, click to expand the **Time Stepping** section.

3 From the **Method** list, choose **Generalized alpha**.

4 From the **Steps taken by solver** list, choose **Manual**.

5 In the **Time step** edit field, type `1`.

6 In the **Amplification for high frequency** edit field, type `0.5`.

7 In the **Model Builder** window, right-click **Study 1** and choose **Compute**.

RESULTS

The temperature plot in Figure 2 is one of the default plots.

The following steps reproduce the plots shown in Figure 3 and Figure 4.

1D Plot Group 3

1 Right-click **Results** and choose **1D Plot Group**.

2 In the **Model Builder** window, under **Results** right-click **1D Plot Group 3** and choose **Point Graph**.

3 Select Point 36 only.

4 In the **Point Graph** settings window, locate the **y-Axis Data** section.

5 In the **Expression** edit field, type `ts.tle1.vpl1.saGp/ts.tle1.vpl1.sa_initGp`.

6 Click to expand the **Coloring and Style** section. Find the **Line style** subsection. In the **Width** edit field, type `2`.

7 In the **Model Builder** window, click **1D Plot Group 3**.

8 In the **1D Plot Group** settings window, locate the **Plot Settings** section.

9 Select the **x-axis label** check box.

10 In the associated edit field, type `Time (s)`.

11 Select the **y-axis label** check box.

12 In the associated edit field, type `Normalized deformation resistance`.

13 Click the **Plot** button.

1D Plot Group 4

1 In the **Model Builder** window, right-click **Results** and choose **1D Plot Group**.

2 Right-click **1D Plot Group 4** and choose **Point Graph**.

3 Select Point 36 only.

4 In the **Point Graph** settings window, click **Replace Expression** in the upper-right corner of the **y-Axis Data** section. From the menu, choose **Thermal Stress (Solid Mechanics)>Strain>Strain tensor, local coordinate system>Strain tensor, local coordinate system, 12 component (ts.el12)**.

5 Locate the **Coloring and Style** section. Find the **Line style** subsection. In the **Width** edit field, type `2`.

6 Click to expand the **Legends** section. Select the **Show legends** check box.

7 From the **Legends** list, choose **Manual**.

8 In the table, enter the following settings:

Legends
`Total strain`

9 In the **Model Builder** window, right-click **1D Plot Group 4** and choose **Point Graph**.

10 Select Point 36 only.

11 In the **Point Graph** settings window, click **Replace Expression** in the upper-right corner of the **y-Axis Data** section. From the menu, choose **Thermal Stress (Solid Mechanics)>Strain (Gauss points)>Creep strain tensor, local coordinate system>Creep strain tensor, local coordinate system, 12 component (ts.ecGp12)**.

12 Locate the **Coloring and Style** section. Find the **Line style** subsection. From the **Line** list, choose **Dashed**.

13 In the **Width** edit field, type `2`.

14 Locate the **Legends** section. Select the **Show legends** check box.

15 From the **Legends** list, choose **Manual**.

16 In the table, enter the following settings:

Legends
`Creep strain`

17 Right-click **1D Plot Group 4** and choose **Point Graph**.

18 Select Point 36 only.

19 In the **Point Graph** settings window, locate the **y-Axis Data** section.

20 In the **Expression** edit field, type `ts.el12-ts.ecGp12`.

21 Click to expand the **Coloring and Style** section. Find the **Line style** subsection. From the **Line** list, choose **Dotted**.

22 In the **Width** edit field, type `3`.

23 Click to expand the **Legends** section. Select the **Show legends** check box.

24 From the **Legends** list, choose **Manual**.

25 In the table, enter the following settings:

Legends
`Elastic strain`

26 In the **Model Builder** window, click **1D Plot Group 4**.

27 In the **1D Plot Group** settings window, locate the **Plot Settings** section.

28 Select the **x-axis label** check box.

29 In the associated edit field, type `Time (s)`.

30 Select the **y-axis label** check box.

31 In the associated edit field, type `Shear strain, xy component`.

32 Click to expand the **Title** section. From the **Title type** list, choose **None**.

33 Click the **Plot** button.